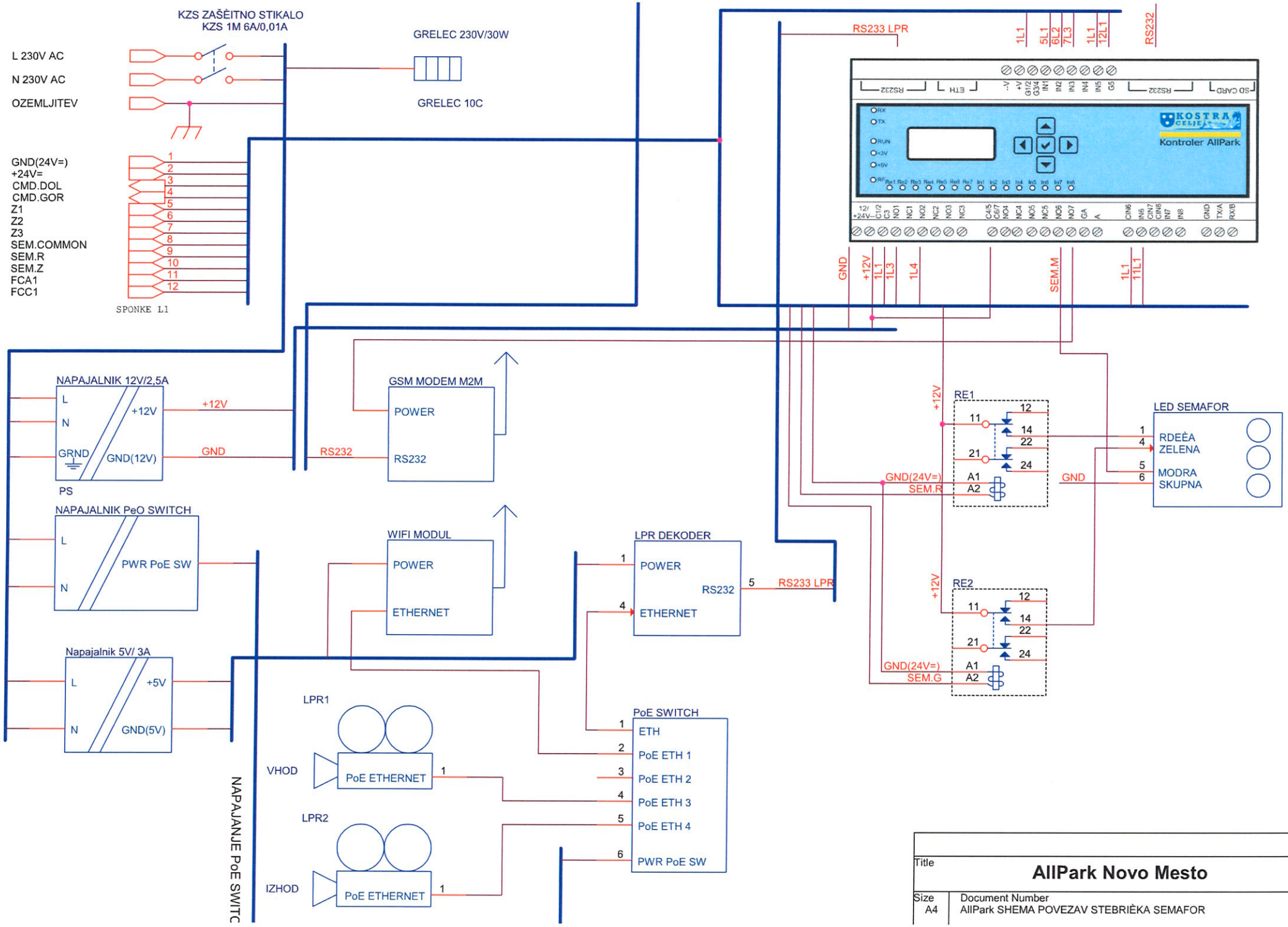
KZS ZAŠČITNO STIKALO
KZS 1M 6A/0,01A
L 230V AC
N 230V AC
OZEMLJITEV
GRELEC 230V/30W
GRELEC 10C
GND(24V=)
+24V=
CMD.DOL
CMD.GOR
Z1
Z2
Z3
SEM.COMMON
SEM.R
SEM.Z
FCA1
FCC1
SPONKE L1
RS233 LPR
1L1
5L1
6L2
7L3
1L1
12L1
RS232
Kontroler AllPark
GND
+12V
1L1
1L3
1L4
SEM.M
1L1
11L1
NAPAJALNIK 12V/2,5A
L
N
GRND
+12V
GND(12V)
+12V
GND
PS
GSM MODEM M2M
POWER
RS232
RS232
NAPAJALNIK PeO SWITCH
L
N
PWR PoE SW
WIFI MODUL
POWER
ETHERNET
LPR DEKODER
POWER
RS232
ETHERNET
RS233 LPR
Napajalnik 5V/ 3A
L
N
+5V
GND(5V)
LPR1
VHOD
PoE ETHERNET
LPR2
IZHOD
PoE ETHERNET
PoE SWITCH
ETH
PoE ETH 1
PoE ETH 2
PoE ETH 3
PoE ETH 4
PWR PoE SW
NAPAJANJE PoE SWITC
RE1
RE2
GND(24V=)
SEM.R
SEM.G
LED SEMAFOR
RDEČA
ZELENA
MODRA
SKUPNA
Title
AllPark Novo Mesto
Size
A4
Document Number
AllPark SHEMA POVEZAV STEBRIČKA SEMAFOR
Rev
1